Insulation Cladding Price List : August 2011

Notes:

1 : Straight Rolled Casing prices are per linear metre. We will punch 3mm holes at 150mm centres unless advised to the contrary. Circumferences above 280mm will usually be supplied in 1-metre lengths - below 280mm will be supplied in 500mm lengths. (Some metal types may be in 1250mm / 625mm lengths).

2 : Elbows are priced for any angle up to 90 degrees, ball-swaged, 75mm throat length. Back-fix or Throat-fix is double the standard price as are Elbows and Set Elbows made in halves.

3 : Bends are priced for any angle up to 90 degrees, standard Centre radius (See chart at back of this list). Back-fix or Throat-fix is double the standard price as are Bends and Set Bends made in halves.

4 : Tees are priced for 90 degree only, equal or unequal, 75mm throat length, ball-swaged. Angled and offset Tees are also available as are saddles with the hole cut out for the branch - contact us for further information

5 : Cap Ends are supplied in two equal halves with 75mm skirt. Diameters below 100mm will be manufactured as a Ball-swaged sleeve & disc.

6 : Flange Boxes are supplied in two equal halves with zinc-plated toggle fasteners / screws, Flat-Backs + 20%, Extra splits + 10% each. Minimum diameter = 115mm

7 : Valve Boxes are supplied in two equal halves with zinc-plated toggle fasteners / screws, extra splits + 20% each, rectangular boxes + 10%, Slant type + 50%. Minimum diameter = 115mm

(Please note that due to the many types of Valve in use the Flange and Valve box prices given in this list are for guidance only and are based on the tables of sizes included at the back of this list. The price charged will be calculated on the actual size and type of box supplied. On smaller bore pipe-work a saving can often be made by the use of Cylindrical Valve boxes / Flange boxes in place of 'D' type boxes)

8 : Circumferences - At the back of this price list are tables which show the circumferences we will use for the manufacture of cladding to suit Plain Glass & Foil Faced Insulation unless told otherwise. Due to the wide tolerances used by the Insulation Manufacturers and the subsequent inconsistencies in the sizes of their materials, we would recommend that the circumference over insulation be supplied when ordering and that this measurement be taken from an installed piece and not from a piece out of a box. Prices in this list are based on Plain Glass Insulation. We will usually insist on being given circumferences for Koolphen, Mag' sections and most insulation thickness' over 50mm.

9 : Measuring of jobs on clients behalf can be arranged at a rate of £ 37.50 per hour including travelling time, plus travelling costs of £ 0.50 per mile.

10 : Delivery A charge of £20.00 per consignment will be made for any delivery within 15 miles of the M25. Rates for deliveries outside this area or for timed deliveries are negotiable. Special deliveries by carrier / courier will be charged at the rate charged to us.

Please note that any times or dates given for delivery are estimates only - while we will make every effort to comply with such times, it is not a guarantee and we will not be liable for any failure to deliver nor for loss or consequential loss arising from delivery/non delivery howsoever caused.

11 : Discounts in the form of a rebate based on clients nett monthly turnover will be awarded according to the following table:

Nett Monthly turnover Excl VAT	Discount Applicable
£Zero to £4,999	NIL
£5,000 to £9,999	5%
£10,000 plus	10%

12 : Availability we stock a range of approximately 2,000 Elbows, Set Elbows and Equal Tees in Stucco Aluminium and casing to suit can usually be produced within a few hours. Bends, Valve & Flange boxes are made to order with a two to three day turn-around depending on pressure of work. Please contact us with your specific requirements and we will endeavour to give a firm delivery date - we try not to make a promise that we can't keep.

13 : Victaulic Fittings :

As an alternative to Cheese Boxes on Victaulic Bends and Sets, we can offer an economical and aesthetically pleasing solution in the form of an oversized elbow/set fitted with reducers at each end. Similarly, for Tee pieces we can offer an oversize Saddle, Tee and Reducers.
When pricing these items please follow the following criteria:
Bends/Elbows/Sets : allow three times the Elbow price for the next size up. i.e. Pipe Size is 168mm O/D plus insulation - allow three times the price of the 219mm O/D elbow.
Tees : allow four times the Elbow price for the next size up. i.e. Pipe Size is 168mm O/D plus insulation - allow four times the price of the 219mm O/D elbow.

STANDARD TERMS & CONDITIONS OF SALE
D & S SHEET METAL LIMITED ('The Company')

1. ORDERS The Company is not willing to contract other than on these conditions and any printed or standard conditions which appear or are referred to on any documents emanating from the purchaser are to have no legal effect whatsoever. No order shall become binding upon the Company until it has been expressly accepted by the Company in writing. All orders are to be confirmed in writing.

2. VARIATION No alteration to the Contract or any conditions shall be binding on the Company unless agreed in writing

3. PRICES The Company reserves the right to alter any prices without notice due to market fluctuations, Government levies, National or EEC price increases

4. DELIVERY Times or dates for delivery are estimated figures only. The Company shall make every effort to comply with such times, but is not a guarantee. The Company will not be liable for any failure to deliver nor for loss or consequential loss arising from delivery/non delivery howsoever caused.

5. TERMS FOR PAYMENT Payment of all monies due in respect of the delivery is due by the end of month following date of invoice. Any monies outstanding after this date the Customer, at the discretion of the Company shall pay interest at the rate of 1.5% per month. from due date for the total amount overdue until paid.

6. RISK Risk in the goods shall pass to the purchaser on delivery not withstanding that ownership will not pass until payment is received in full. The property of the goods sold shall remain with the Company until the purchaser pays for them in full and the purchaser shall have possession of them until payment in full as a bailee only. Should the goods or materials supplied by the Company become incorporated, mixed, combined or processed with other property, legal ownership of that product shall be vested in the Company until such time as payment is received in full of the contracted price and the Customer shall be the bailee of the goods for the Company.

7. INSOLVENCY OF CUSTOMER The Customer shall grant an irrevocable licence to the Company or its agents, with or without vehicles, to enter on to the Customers premises to take possession of the Companys goods. In the event of any resale by the Customer of the Companys goods, the beneficial entitlement of the Company shall attach any claim against the Customers purchaser and to any proceeds of that sale so that such claims or proceeds of sale shall be held in trust for the Company and the Customer shall have a fiduciary duty to account to the Company for that claim and any proceeds of sale. Where proceeds of such resale are received by the Customer, he shall keep them in a separate account as agent for the Company until the proceeds are handed over to the Company.

8. LOSS OR DAMAGE IN TRANSIT The Company accepts liability for loss or damage while in transit to the Customer except where goods are collected by the Customer or its agents, provided the Company is notified by the Customer in writing within 3 days of delivery. Any discrepancies as to amounts or quantities should be advised immediately and confirmed in writing within 3 days and an opportunity given to recount.

9. LIABILITY The Company gives no express or implied warranty and accepts no liability whatsoever (direct, indirect or consequential) whether in contract or tort as to materials, workmanship, performance, design or specification, suitability for any particular purpose or any other aspect of the goods, their characteristics or behaviour except that a good title is warranted to the goods sold and that liability for death or personal injury as a result of the Companys negligence and liability under the consumer protection act 1987 may not be excluded or limited. The Company shall not be under any liability once the goods have been worked on or processed, nor for any defect arising out of an error of Customer specification.

10. RETURNS FOR CREDIT The Company disclaims liability for goods returned without the written consent of the Company. Any goods approved for return must be advised in writing quoting the Companys invoice/advlce number. The Company reserves the right to charge a reasonable handling charge, where this is justified.

11. FORCE MAJEURE The Company shall be under no liability if it should be unable to carry out any provision of the Contract for any reason. beyond its control including (but without limiting the foregoing) act of God, legislation, war, fire, failure of power supply, lockout, strike or other industrial dispute or inability to produce materials required for the performance of the Contract, the Company shall not be responsible for any delay or non delivery caused by the foregoing.

Data Protection Act 1998 : We will make a search with a credit reference agency, which will keep a record of that search and will share that information with other businesses. We may also make enquiries about the principal directors with as credit reference agency

Aluminium is the third most abundant element in the earth's crust, it is ductile, non-magnetic and an excellent conductor of heat and electricity. Aluminium and its alloys are highly resistant to corrosion, when exposed to air the metal develops a thin film of Aluminium Oxide (Al2O3) almost immediately, this film is colourless, tough and non-flaking, few chemicals can dissolve it.
Aluminium is an excellent reflector of all forms of radiated energy, because it reflects about 90% of radiated heat it is effective at keeping heat out or in.

The grade of aluminium used in the manufacture of items in this list is type 1050A-H14 BS1470-1970

We carry extensive stocks in 1000mm wide coil form of 20swg, 22swg and 24swg Stucco embossed (Hammerclad) aluminium.

0.6mm Stucco Aluminium by Circumference				
Circ	Straight	Elbow	Tee	Cap
180	1.40	1.88	1.15	1.08
195	1.48	1.90	1.16	1.17
210	1.55	1.92	1.17	1.24
225	1.64	1.94	1.18	1.33
240	1.72	1.97	1.20	1.42
255	1.83	2.00	1.21	1.51
270	1.90	2.02	1.22	1.58
285	1.99	2.05	1.24	1.67
300	2.07	2.08	1.25	1.76
315	2.16	2.11	1.27	1.85
330	2.24	2.14	1.28	1.94
345	2.31	2.16	1.30	2.02
360	2.45	2.20	1.31	2.11
375	2.53	2.23	1.33	2.20
390	2.62	2.26	1.35	2.29
405	2.69	2.29	1.36	2.37
420	2.77	2.33	1.38	2.46
435	2.86	2.36	1.40	2.56
450	2.94	2.40	1.42	2.65
465	3.01	2.43	1.44	2.72
480	3.10	2.47	1.46	2.82
495	3.18	2.51	1.48	2.91
510	3.27	2.55	1.50	3.01
525	3.35	2.59	1.52	3.10
540	3.42	2.63	1.54	3.18
555	3.50	2.67	1.56	3.27
570	3.59	3.08	1.71	3.37
585	3.67	3.12	1.73	3.47
600	3.74	3.16	1.75	3.54
615	3.83	3.21	1.78	3.64
630	3.91	3.25	1.80	3.74
645	4.00	3.30	1.82	3.83
660	4.08	3.35	1.85	3.93
675	4.15	3.39	1.87	4.01
690	4.24	3.73	1.90	4.11
705	4.32	3.78	1.92	4.20
720	4.41	3.83	1.95	3.33
735	4.47	3.87	1.97	3.39
750	4.56	3.93	2.00	3.47
765	4.64	3.98	2.03	3.55
780	4.73	4.04	2.05	3.62
795	4.82	4.10	2.08	3.70
810	4.88	4.14	2.11	3.77
825	4.97	4.20	2.13	3.84
840	5.05	4.80	2.26	3.92
855	5.14	4.86	2.29	4.00
870	5.21	4.91	2.31	4.07
885	5.29	4.97	2.34	4.15
900	5.38	5.03	2.37	4.23
915	5.46	5.10	2.40	4.31
930	5.53	5.15	2.43	4.37
945	5.61	5.21	2.46	4.45

0.6mm Stucco Aluminium : 20mm Insulation							
O/D	Straight	Elbow	Bend	Tee	Cap	Flange	Valve
15	1.35	1.86	3.29	1.14	1.02	N/A	N/A
21	1.45	1.89	3.32	1.16	1.13	N/A	N/A
28	1.57	1.92	3.36	1.17	1.25	N/A	N/A
34	1.67	1.95	3.39	1.19	1.36	N/A	N/A
35	1.69	1.96	3.39	1.19	1.38	N/A	N/A
42	1.83	2.00	3.43	1.21	1.51	N/A	N/A
48	1.94	2.03	3.46	1.23	1.62	N/A	N/A
54	2.04	2.06	3.48	1.25	1.72	N/A	N/A
60	2.14	2.10	3.51	1.27	1.83	N/A	N/A
67	2.26	2.14	3.84	1.29	1.96	N/A	N/A
76	2.47	2.20	3.88	1.32	2.13	N/A	N/A
89	2.69	2.29	4.01	1.36	2.37	N/A	N/A
108	3.01	2.43	4.26	1.44	2.72	N/A	N/A
114	3.11	2.48	4.30	1.46	2.84	N/A	N/A
140	3.56	3.06	4.68	1.70	3.33	N/A	N/A
168	4.03	3.32	5.11	1.83	3.87	N/A	N/A
219	4.90	4.15	6.96	2.11	3.78	N/A	N/A
273	5.82	5.70	9.05	3.57	4.65	N/A	N/A
324	6.69	6.46	11.00	3.95	5.50	N/A	N/A

0.6mm Stucco Aluminium : 25mm Insulation							
O/D	Straight	Elbow	Bend	Tee	Cap	Flange	Valve
15	1.52	1.91	3.35	1.17	1.20	N/A	N/A
21	1.62	1.94	3.37	1.18	1.31	N/A	N/A
28	1.74	1.98	3.41	1.20	1.43	N/A	N/A
34	1.87	2.01	3.44	1.22	1.54	N/A	N/A
35	1.88	2.01	3.44	1.22	1.56	N/A	N/A
42	2.00	2.05	3.47	1.24	1.69	N/A	N/A
48	2.11	2.09	3.50	1.26	1.80	N/A	N/A
54	2.21	2.13	3.82	1.28	1.91	N/A	N/A
60	2.31	2.16	3.85	1.30	2.02	N/A	N/A
67	2.48	2.21	3.89	1.32	2.15	N/A	N/A
76	2.64	2.27	3.93	1.35	2.31	N/A	N/A
89	2.86	2.36	4.06	1.40	2.56	N/A	N/A
108	3.18	2.51	4.33	1.48	2.91	N/A	N/A
114	3.28	2.56	4.37	1.50	3.03	N/A	N/A
140	3.73	3.15	4.76	1.75	3.52	N/A	N/A
168	4.20	3.71	6.07	1.88	4.07	N/A	N/A
219	5.07	4.81	7.94	2.26	3.94	N/A	N/A
273	5.99	5.84	9.69	3.64	4.81	N/A	N/A
324	6.91	6.61	11.69	4.03	5.67	N/A	N/A

0.6mm Stucco Aluminium : 30mm Insulation							
O/D	Straight	Elbow	Bend	Tee	Cap	Flange	Valve
15	1.69	1.96	3.39	1.19	1.38	N/A	N/A
21	1.79	1.99	3.42	1.21	1.49	N/A	N/A
28	1.94	2.03	3.46	1.23	1.62	N/A	N/A
34	2.04	2.06	3.48	1.25	1.72	N/A	N/A
35	2.05	2.07	3.49	1.25	1.74	N/A	N/A
42	2.17	2.11	3.81	1.27	1.87	N/A	N/A
48	2.28	2.15	3.84	1.29	1.98	N/A	N/A
54	2.43	2.19	3.87	1.31	2.09	N/A	N/A
60	2.53	2.23	3.90	1.33	2.20	N/A	N/A
67	2.65	2.28	3.93	1.36	2.33	N/A	N/A
76	2.81	2.34	3.98	1.39	2.50	N/A	N/A
89	3.03	2.44	4.12	1.44	2.74	N/A	N/A
108	3.35	2.59	4.39	1.52	3.10	N/A	N/A
114	3.45	2.64	4.43	1.54	3.22	N/A	N/A
140	3.90	3.24	4.83	1.79	3.72	N/A	N/A
168	4.37	3.81	6.15	1.94	4.26	N/A	N/A
219	5.24	4.93	8.04	2.32	4.10	N/A	N/A
273	6.16	6.00	9.85	3.72	4.98	N/A	N/A
324	7.08	6.77	11.83	4.11	5.84	N/A	N/A

0.6mm Stucco Aluminium : 40mm Insulation							
O/D	Straight	Elbow	Bend	Tee	Cap	Flange	Valve
15	2.05	2.07	3.49	1.25	1.74	N/A	N/A
21	2.16	2.11	3.81	1.27	1.85	N/A	N/A
28	2.28	2.15	3.84	1.29	1.98	N/A	N/A
34	2.43	2.19	3.87	1.31	2.09	N/A	N/A
35	2.45	2.20	3.88	1.31	2.11	N/A	N/A
42	2.57	2.24	3.91	1.34	2.24	N/A	N/A
48	2.67	2.28	3.94	1.36	2.35	N/A	N/A
54	2.77	2.33	3.97	1.38	2.46	N/A	N/A
60	2.87	2.37	4.00	1.40	2.57	N/A	N/A
67	2.99	2.42	4.03	1.43	2.71	N/A	N/A
76	3.15	2.49	4.07	1.47	2.88	N/A	N/A
89	3.37	2.60	4.22	1.52	3.12	N/A	N/A
108	3.69	3.13	4.54	1.74	3.49	N/A	N/A
114	3.79	3.19	4.57	1.77	3.60	N/A	N/A
140	4.24	3.73	5.85	1.90	4.11	N/A	N/A
168	4.71	4.03	6.32	2.05	3.61	N/A	N/A
219	5.58	5.19	8.25	2.45	4.42	N/A	N/A
273	6.50	6.29	10.10	3.87	5.31	N/A	N/A
324	7.42	7.09	12.12	4.27	6.18	N/A	N/A

0.6mm Stucco Aluminium : 50mm Insulation							
O/D	Straight	Elbow	Bend	Tee	Cap	Flange	Valve
15	2.45	2.20	3.88	1.31	2.11	N/A	N/A
21	2.55	2.24	3.90	1.33	2.22	N/A	N/A
28	2.67	2.28	3.94	1.36	2.35	N/A	N/A
34	2.77	2.33	3.97	1.38	2.46	N/A	N/A
35	2.79	2.33	3.97	1.39	2.48	N/A	N/A
42	2.91	2.39	4.00	1.41	2.61	N/A	N/A
48	3.01	2.43	4.03	1.44	2.72	N/A	N/A
54	3.11	2.48	4.06	1.46	2.84	N/A	N/A
60	3.22	2.53	4.09	1.48	2.95	N/A	N/A
67	3.33	2.58	4.12	1.51	3.08	N/A	N/A
76	3.49	2.66	4.17	1.55	3.26	N/A	N/A
89	3.71	3.14	4.35	1.74	3.50	N/A	N/A
108	4.03	3.32	4.66	1.83	3.87	N/A	N/A
114	4.13	3.38	4.70	1.86	3.99	N/A	N/A
140	4.58	3.94	6.00	2.00	3.48	N/A	N/A
168	5.05	4.80	7.36	2.26	3.92	N/A	N/A
219	5.92	5.78	8.97	3.61	4.75	N/A	N/A
273	6.89	6.59	10.89	4.02	5.65	N/A	N/A
324	7.76	7.43	12.41	4.45	6.53	N/A	N/A

0.6mm Stucco Aluminium : 60mm Insulation							
O/D	Straight	Elbow	Bend	Tee	Cap	Flange	Valve
15	2.79	2.33	3.97	1.39	2.48	N/A	N/A
21	2.89	2.38	4.00	1.41	2.59	N/A	N/A
28	3.01	2.43	4.03	1.44	2.72	N/A	N/A
34	3.11	2.48	4.06	1.46	2.84	N/A	N/A
35	3.13	2.49	4.07	1.46	2.86	N/A	N/A
42	3.25	2.54	4.10	1.49	2.99	N/A	N/A
48	3.35	2.59	4.13	1.52	3.10	N/A	N/A
54	3.45	2.64	4.16	1.54	3.22	N/A	N/A
60	3.56	3.06	4.20	1.70	3.33	N/A	N/A
67	3.67	3.12	4.24	1.73	3.47	N/A	N/A
76	3.83	3.21	4.28	1.78	3.64	N/A	N/A
89	4.05	3.33	4.45	1.84	3.89	N/A	N/A
108	4.37	3.81	5.66	1.94	4.26	N/A	N/A
114	4.47	3.87	5.70	1.97	3.39	N/A	N/A
140	4.92	4.16	6.15	2.12	3.80	N/A	N/A
168	5.39	5.05	7.53	2.38	4.24	N/A	N/A
219	6.26	6.09	9.21	3.77	5.08	N/A	N/A
273	7.23	6.91	11.14	4.18	5.99	N/A	N/A
324	8.10	8.12	13.20	4.93	6.89	N/A	N/A

0.6mm Stucco Aluminium : 70mm Insulation							
O/D	Straight	Elbow	Bend	Tee	Cap	Flange	Valve
15	3.13	2.49	4.07	1.46	2.86	N/A	N/A
21	3.23	2.53	4.10	1.49	2.97	N/A	N/A
28	3.35	2.59	4.13	1.52	3.10	N/A	N/A
34	3.45	2.64	4.16	1.54	3.22	N/A	N/A
35	3.47	2.65	4.16	1.55	3.24	N/A	N/A
42	3.59	3.08	4.21	1.71	3.37	N/A	N/A
48	3.69	3.13	4.24	1.74	3.49	N/A	N/A
54	3.79	3.19	4.27	1.77	3.60	N/A	N/A
60	3.90	3.24	4.30	1.79	3.72	N/A	N/A
67	4.02	3.31	4.33	1.83	3.85	N/A	N/A
76	4.17	3.40	4.37	1.87	4.03	N/A	N/A
89	4.39	3.82	5.43	1.94	3.31	N/A	N/A
108	4.71	4.03	5.79	2.05	3.61	N/A	N/A
114	4.82	4.10	5.83	2.08	3.70	N/A	N/A
140	5.26	4.95	7.17	2.33	4.12	N/A	N/A
168	5.73	5.64	7.70	3.54	4.57	N/A	N/A
219	6.60	6.38	9.42	3.92	5.41	N/A	N/A
273	7.58	7.24	11.39	4.35	6.34	N/A	N/A
324	8.44	8.49	13.49	5.11	7.24	N/A	N/A

0.6mm Stucco Aluminium : 100mm Insulation							
O/D	Straight	Elbow	Bend	Tee	Cap	Flange	Valve
15	4.15	3.39	4.37	1.87	4.01	N/A	N/A
21	4.25	3.74	5.27	1.90	4.13	N/A	N/A
28	4.37	3.81	5.31	1.94	4.26	N/A	N/A
34	4.47	3.87	5.34	1.97	3.39	N/A	N/A
35	4.49	3.89	5.34	1.98	3.41	N/A	N/A
42	4.61	3.96	5.38	2.01	3.52	N/A	N/A
48	4.71	4.03	5.40	2.05	3.61	N/A	N/A
54	4.82	4.10	5.43	2.08	3.70	N/A	N/A
60	4.92	4.16	5.46	2.12	3.80	N/A	N/A
67	5.04	4.25	5.49	2.16	3.91	N/A	N/A
76	5.19	4.90	6.41	2.30	4.05	N/A	N/A
89	5.41	5.06	6.63	2.39	4.26	N/A	N/A
108	5.73	5.64	7.04	3.54	4.57	N/A	N/A
114	5.84	5.71	7.08	3.58	4.67	N/A	N/A
140	6.28	6.10	8.15	3.77	5.09	N/A	N/A
168	6.81	6.52	8.74	3.98	5.57	N/A	N/A
219	7.68	7.34	10.58	4.40	6.44	N/A	N/A
273	8.60	8.66	12.63	5.19	7.41	N/A	N/A
324	9.46	9.70	14.40	5.72	8.34	N/A	N/A

Miscellaneous Prices

Angle : per linear metre

Metal Type & Gauge	25mm	40mm	50mm	75mm	100mm
0.6mm Stucco Aluminium	0.45	0.60	0.70	0.95	1.20

'Z'-Bar and Channel : add 50% to equivalent Angle price.

Cylindrical Vessel Bodies & Flat Sheet cut to size : Bodies Rolled & Lockformed as required.Use Duct Rate 1 for appropriate metal type & gauge

Vessel Ends Flat : with 100mm Skirt allowed for in price

Diam (mms)	0.6mm Stucco Alumi
0400	6.36
0475	7.73
0550	9.16
0625	10.66
0700	12.21
0775	13.82
0850	15.50
0925	17.23
1000	19.03
1075	20.89
1150	22.81
1225	24.79
1300	26.83
1375	28.93
1450	31.09
1525	33.32
1600	35.60
1675	37.95
1750	40.35
1825	42.82
1900	45.35
1975	47.94
2050	50.59
2125	53.30
2200	56.07
2275	58.91
2350	61.80
2425	64.75
2500	67.77

Miscellaneous Prices - Cont.....

Sheets :

We can de-coil to any length by 1000mm wide :

Metal Type & Gauge	per Sq Metre	2000 x 1000	2500 x 1000
0.6mm Stucco Aluminium	5.04	10.08	12.60

Sundries :

Item Description	Unit Price	Unit of Supply
½" No.8 Stainless, Pan-head Pozi Self tap Screws	11.15	per thousand
½" No.8 Zinc-plated, Pan-head Pozi Self tap Screws	5.99	per thousand
3.2mm Aluminium Blind Multi-grip rivets	8.70	per thousand
3.2mm Stainless Steel Blind rivets	44.00	per thousand
3.3mm HSS Stub Drill bits	0.90	each
3.3mm Cobalt Stub Drill bits	2.21	each
Zinc Plated Toggle & Hook fastener	0.14	each
Stainless Steel Toggle & Hook fastener	0.35	each

Duct Cladding

Duct cladding is supplied at four different rates that vary according to quantity and method of manufacture

Rate 1 : This rate applies to Folded, Rolled or Lock-formed sheet and allows for straight parallel lines with two folds only and no pattern development

Rate 2 : This rate applies to Folded and Lock-formed sheet and allows for straight parallel lines with up to four folds and no pattern development

Rate 3 : This is a composite rate and allows for the manufacture of any item (except Square to Rounds) when it is part of a complete order of no less than 100 square metres, However, depending on the ratio of Straight to Fittings it may be better to calculate the areas of Straight and Fittings separately when doing your take off and apply Rate 1 and Rate 4 accordingly, from our experience this is usually the more economical option.

Rate 4 : This rate applies to any specially manufactured items such as Bends, Sets, Reducers, Boot Tees etc when ordered as a single item or as part of an order the total requirement of which is less than 100 square metres

Square to Rounds : These will be charged at Rate 1 plus a surcharge of £22.00 each

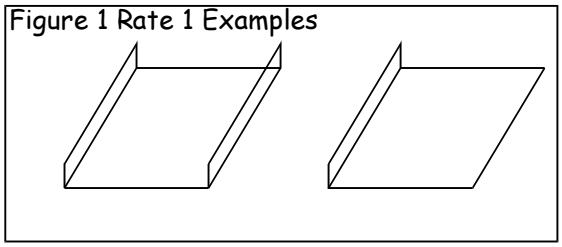

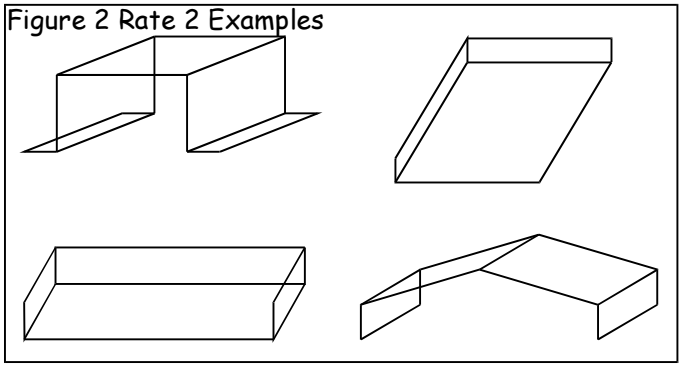

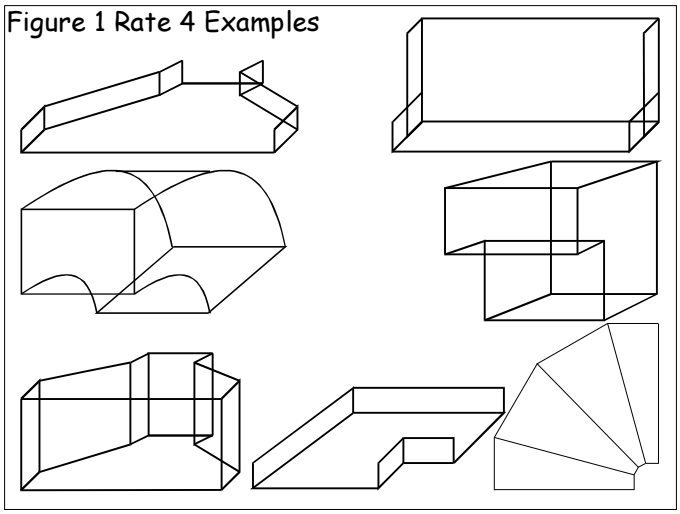

Duct Cladding Rates

Metal Type & Gauge	Rate 1	Rate 2	rate 3	Rate 4
0.6mm Stucco Aluminium	7.02	8.82	9.44	11.88

Circumference in millimetres
Plain Glass Insulation

O/D	20mm	25mm	30mm	40mm	50mm	60mm	70mm	100mm
15	173	205	236	299	362	425	488	676
21	192	224	255	318	381	444	506	695
28	214	246	277	340	403	466	528	717
34	233	264	296	359	422	484	547	736
35	236	268	299	362	425	488	550	739
42	258	290	321	384	447	510	572	761
48	277	308	340	403	466	528	591	780
54	296	327	359	422	484	547	610	799
60	315	346	378	440	503	566	629	817
67	337	368	400	462	525	588	651	839
76	365	396	428	491	553	616	679	868
89	406	437	469	531	594	657	720	909
108	466	497	528	591	654	717	780	968
114	484	516	547	610	673	736	799	987
140	566	597	629	692	755	817	880	1069
168	654	685	717	780	843	905	968	1157
219	814	846	877	940	1003	1066	1128	1317
273	984	1015	1047	1110	1172	1235	1298	1487
324	1144	1176	1207	1270	1333	1396	1458	1647

Circumference in millimetres
Foil-Faced Insulation

O/D	20mm	25mm	30mm	40mm	50mm	60mm	70mm	100mm
15	180	211	242	305	368	431	494	682
21	198	230	261	324	387	450	513	701
28	220	252	283	346	409	472	535	723
34	239	271	302	365	428	491	553	742
35	242	274	305	368	431	494	557	745
42	264	296	327	390	453	516	579	767
48	283	315	346	409	472	535	597	786
54	302	334	365	428	491	553	616	805
60	321	352	384	447	510	572	635	824
67	343	374	406	469	531	594	657	846
76	371	403	434	497	560	623	685	874
89	412	444	475	538	601	663	726	915
108	472	503	535	597	660	723	786	975
114	491	522	553	616	679	742	805	993
140	572	604	635	698	761	824	887	1075
168	660	692	723	786	849	912	975	1163
219	821	852	883	946	1009	1072	1135	1323
273	990	1022	1053	1116	1179	1242	1304	1493
324	1150	1182	1213	1276	1339	1402	1465	1653

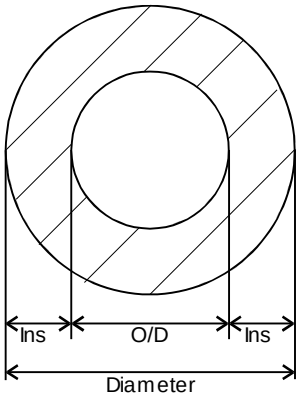

Calculating Circumferences
Diameter= OD + (Ins x 2)
Circ = Diameter x pi (Where pi = 3.142)

For foil faced insulation we add 2mm to the diameter before multiplying by Pi

Overlap :

Up to 255mm circumference we add 25mm overlap
From 256mm to 356mm circumference we add 30mm overlap
From 357mm to 1150mm circumference we add 40mm overlap
For circumferences greater than 1150mm we add 50mm overlap
If you require larger / smaller overlap then please specify at time of order

Valve box sizes used in the calculation of prices in this list
Measurements in Inches

O/D	20mm			25mm			30mm			40mm		
	A	B	C	A	B	C	A	B	C	A	B	C
15	10.75	6.5	5.25	11	6.5	5.75	11.5	6.75	6	12.25	7.25	7
21	10.75	6.5	5.25	11	6.5	5.75	11.5	6.75	6	12.25	7.25	7
28	11	7	5.75	11.5	7.25	6	11.75	7.5	6.5	12.5	7.75	7.25
34	11.5	7.5	6	11.75	7.75	6.5	12.25	8	7	13	8.25	7.75
35	11.5	7.5	6	11.75	7.75	6.5	12.25	8	7	13	8.25	7.75
42	11.75	9	7	12.25	9.25	7.5	12.5	9.5	7.75	13.5	9.75	8.75
48	12.25	9.75	7.5	12.5	9.75	7.75	13	10	8.25	13.75	10.5	9
54	12.75	10	7.75	13.25	10.25	8	13.5	10.25	8.5	14.25	10.75	9.25
60	13.5	10.5	8	13.75	10.75	8.5	14.25	11	8.75	15	11.25	9.75
67	13.75	11	8.5	14.25	11.25	8.75	14.5	11.5	9.25	15.25	12	10
76	14.25	11.75	8.75	14.5	12	9.25	15	12	9.75	15.75	12.5	10.5
89	14.5	12.5	9.5	15	12.75	9.75	15.25	13	10.25	16.25	13.5	11
108	15	13.75	10.25	15.25	14	10.75	15.75	14.25	11	16.5	14.5	11.75
114	15	13.75	10.25	15.25	14	10.75	15.75	14.25	11	16.5	14.5	11.75
140	15.25	15.5	11.5	15.75	15.75	11.75	16.25	16	12.25	17	16.25	13
168	15.75	17.5	12.75	16.25	17.75	13.25	16.5	18	13.5	17.25	18.5	14.25
219	19	20.75	15	19.25	21	15.25	19.75	21.25	15.75	20.5	21.75	16.5
273	20.5	24	17.25	20.75	24.25	17.5	21.25	24.5	18	22	25	18.75
324	21.5	27	19	22	27.25	19.5	22.25	27.5	20	23	27.75	20.75

O/D	50mm			60mm			70mm			100mm		
	A	B	C	A	B	C	A	B	C	A	B	C
15	13	7.5	7.75	13.75	8	8.5	14.5	8.25	9.25	17	9.5	11.5
21	13	7.5	7.75	13.75	8	8.5	11.5	8.25	9.25	17	9.5	11.5
28	13.5	8.25	8	14.25	8.5	8.75	15	9	9.75	17.25	10.25	12
34	13.75	8.75	8.5	14.5	9.25	9.25	15.25	9.5	10	17.75	10.75	12.5
35	13.75	8.75	8.5	14.5	9.25	9.25	15.25	9.5	10	17.75	10.75	12.5
42	14.25	10.25	9.5	15	10.75	10.25	15.75	11	11	18	12.25	13.5
48	14.5	10.75	9.75	15.25	11.25	10.75	16.25	11.5	11.5	18.5	12.75	13.75
54	15.25	11	10	16	11.5	10.75	16.75	12	11.5	19	13	14
60	15.75	11.75	10.5	16.5	12	11.25	17.25	12.5	12	19.75	13.75	14.25
67	16.25	12.25	10.75	17	12.75	11.5	17.75	13	12.5	20	14.25	14.75
76	16.5	13	11.25	17.25	13.25	12	18	13.75	12.75	20.5	14.75	15.25
89	17	13.75	11.75	17.75	14.25	12.5	18.5	14.5	13.5	20.75	15.75	15.75
108	17.25	15	12.5	18	15.25	13.5	19	15.75	14.25	21.25	17	16.5
114	17.25	15	12.5	18	15.25	13.5	19	15.75	14.25	21.25	17	16.5
140	17.75	16.75	13.75	18.5	17.25	14.5	19.25	17.5	15.25	21.75	18.75	17.75
168	18	18.75	15.25	19	19.25	16	19.75	19.5	16.75	22	20.75	19
219	21.25	22	17.25	22.25	22.5	18	23	22.75	19	25.25	24	21.25
273	22.75	25.25	19.5	23.5	25.75	20.25	24.5	26	21	26.75	27.25	23.5
324	23.75	28.25	21.5	24.75	28.75	22.25	25.5	29	23	27.75	30.25	25.5

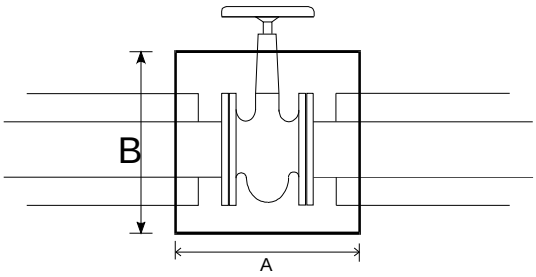

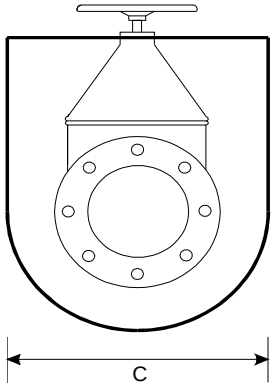

Flange box sizes used in the calculation of prices in this list
Measurements in Inches

O/D	20mm		25mm		30mm		40mm		50mm		60mm		70mm		100	
	Diam	Wide	Diam	Wide	Diam	Wide	Diam	Wide	Diam	Wide	Diam	Wide	Diam	Wide	Diam	Wide
15	5.25	8	5.75	8.25	6	8.75	7	9.5	7.75	10.25	8.5	11	9.25	11.75	11.5	14.25
21	5.25	8	5.75	8.25	6	8.75	7	9.5	7.75	10.25	8.5	11	9.25	11.75	11.5	14.25
28	5.75	8	6	8.25	6.5	8.75	7.25	9.5	8	10.25	8.75	11	9.75	11.75	12	14.25
34	6	8	6.5	8.25	7	8.75	7.75	9.5	8.5	10.25	9.25	11	10	11.75	12.5	14.25
35	6	8	6.5	8.25	7	8.75	7.75	9.5	8.5	10.25	9.25	11	10	11.75	12.5	14.25
42	7	8	7.5	8.25	7.75	8.75	8.75	9.5	9.5	10.25	10.25	11	11	11.75	13.5	14.25
48	7.5	8	7.75	8.25	8.25	8.75	9	9.5	9.75	10.25	10.75	11	11.5	11.75	13.75	14.25
54	7.75	8	8	8.25	8.5	8.75	9.25	9.5	10	10.25	10.75	11	11.5	11.75	14	14.25
60	8	8	8.5	8.25	8.75	8.75	9.75	9.5	10.5	10.25	11.25	11	12	11.75	14.25	14.25
67	8.5	8	8.75	8.25	9.25	8.75	10	9.5	10.75	10.25	11.5	11	12.5	11.75	14.75	14.25
76	8.75	8	9.25	8.25	9.75	8.75	10.5	9.5	11.25	10.25	12	11	12.75	11.75	15.25	14.25
89	9.5	8	9.75	8.25	10.25	8.75	11	9.5	11.75	10.25	12.5	11	13.5	11.75	15.75	14.25
108	10.25	8	10.75	8.25	11	8.75	11.75	9.5	12.5	10.25	13.5	11	14.25	11.75	16.5	14.5
114	10.25	8	10.75	8.25	11	8.75	11.75	9.5	12.5	10.25	13.5	11	14.25	11.75	16.5	14.25
140	11.5	8	11.75	8.25	12.25	8.75	13	9.5	13.75	10.25	14.5	11	15.25	11.75	17.75	14.25
168	12.75	8	13.25	8.25	13.5	8.75	14.25	9.5	15.25	10.25	16	11	16.75	11.75	19	14.25
219	15	8	15.25	8.25	15.75	8.75	16.5	9.5	17.25	10.25	18	11	19	11.75	21.25	14.25
273	17.25	8	17.5	8.25	18	8.75	18.75	9.5	19.5	10.25	20.25	11	21	11.75	23.5	14.25
324	19	8	19.5	8.25	20	8.75	20.75	9.5	21.5	10.25	22.25	11	23	11.75	25.5	14.25

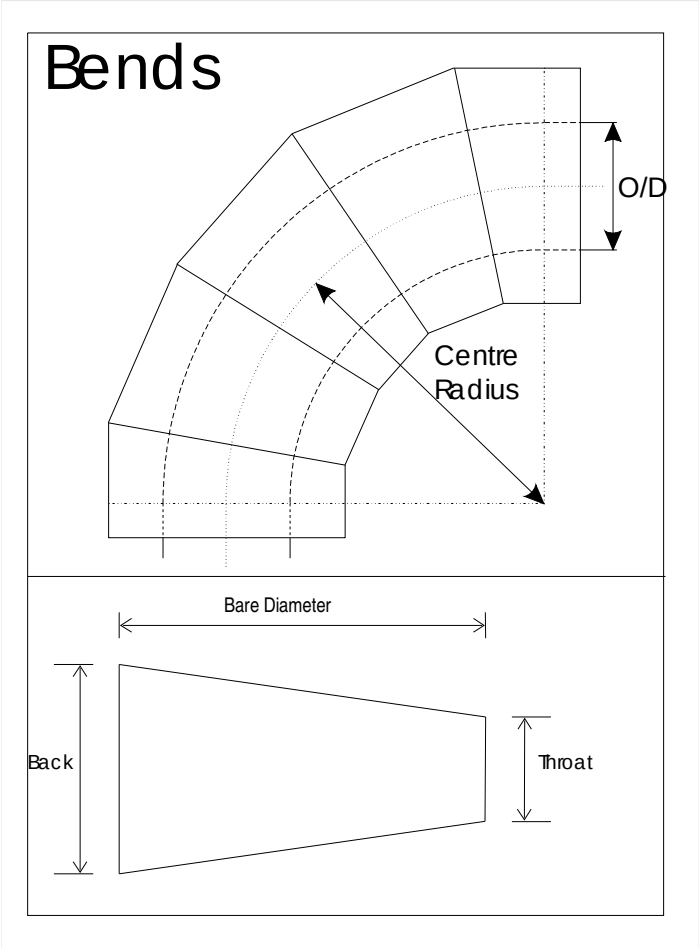

Nominal Bore (Inches)	O/D	Centre Radius
½" Copper	15	96
½" Iron : ¾" Copper	22	96
¾" Iron : 1" Copper	28	96
1" Iron : 1¼" Copper	35	96
1¼" Iron : 1½" Copper	42	96
1½" Iron	48	96
2" Copper	54	96
2" Iron	60	96
2½" Copper	67	96
2½" Iron	76	96
3" Copper	80	115
3" Iron	89	115
4" Copper	108	152
4" Iron	114	152
5" Iron	140	191
6" Iron	168	229
8" Iron	219	305
10" Iron	273	381
12" Iron	324	457
14" Iron	356	533
16" Iron	406	610
18" Iron	456	686
20" Iron	511	762
24" Iron	610	915
28" Iron	711	1067
30" Iron	813	1220

The number of segments will vary according to the O/D and Insulation thickness. Please advise us of your specific requirements.
On Duct bends, if you give us the segment size, diameter and number of complete segments in the bend (Measured bare of insulation) plus the circumference over insulation. We can calculate the Angle and Centre Radius of the bend from this information